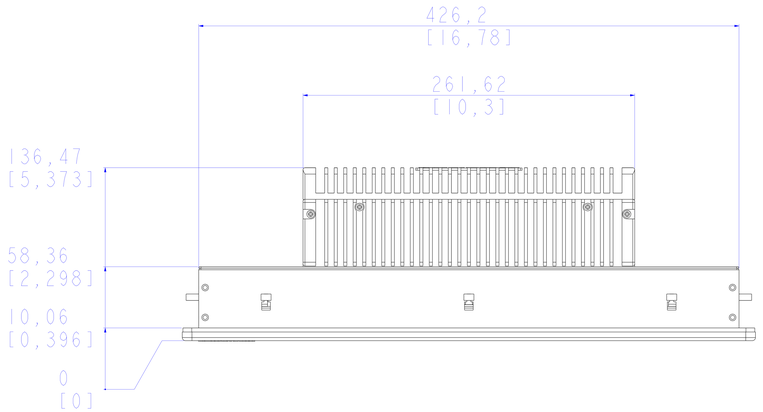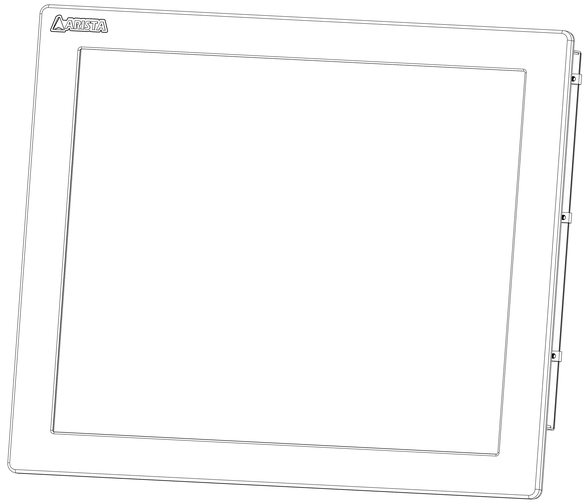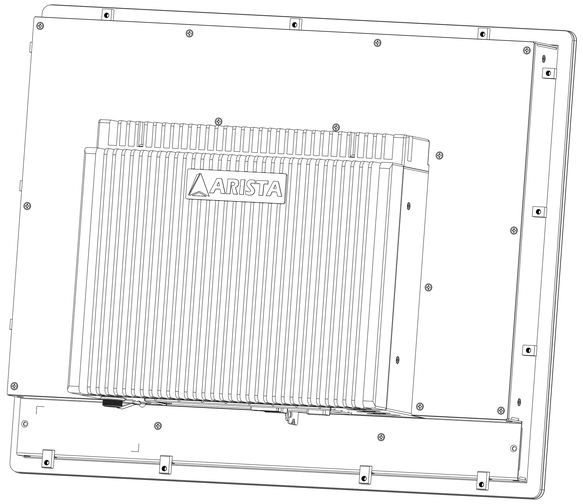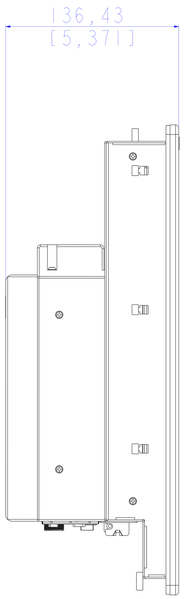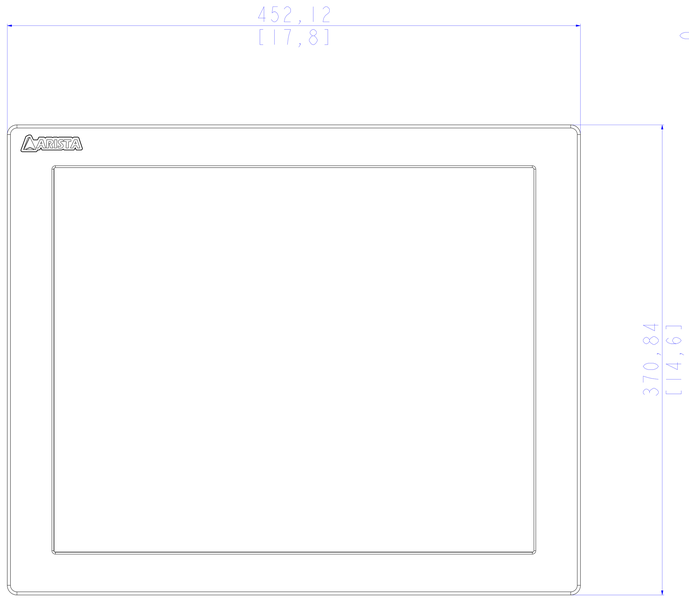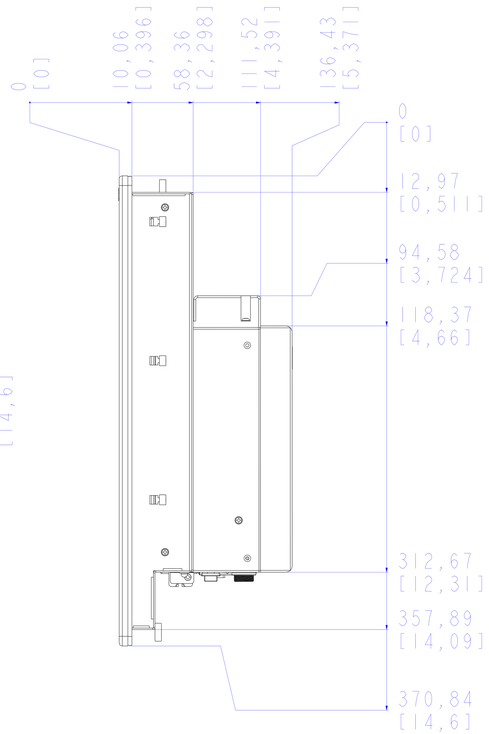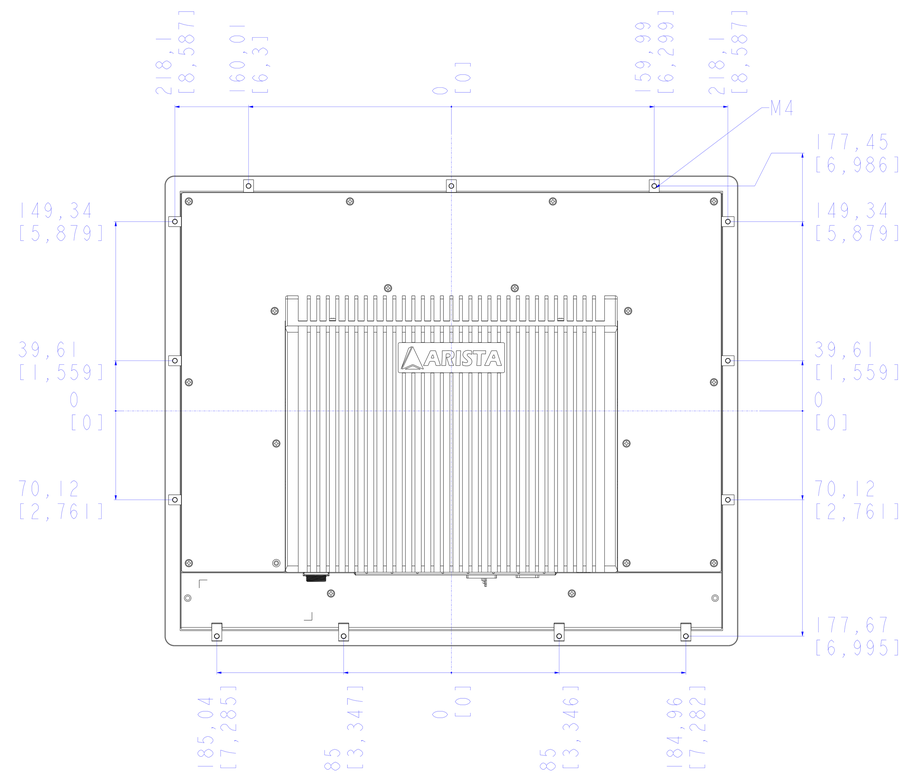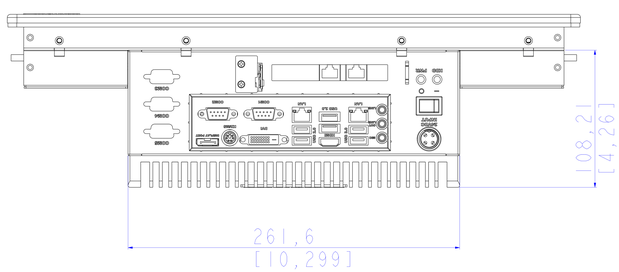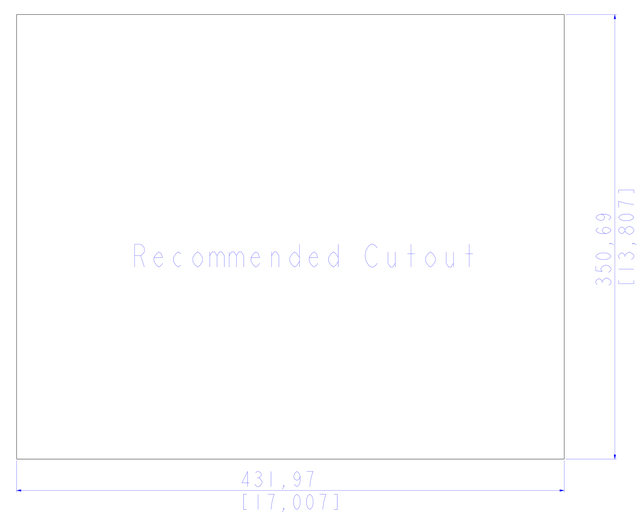ARP-2219AP-H01